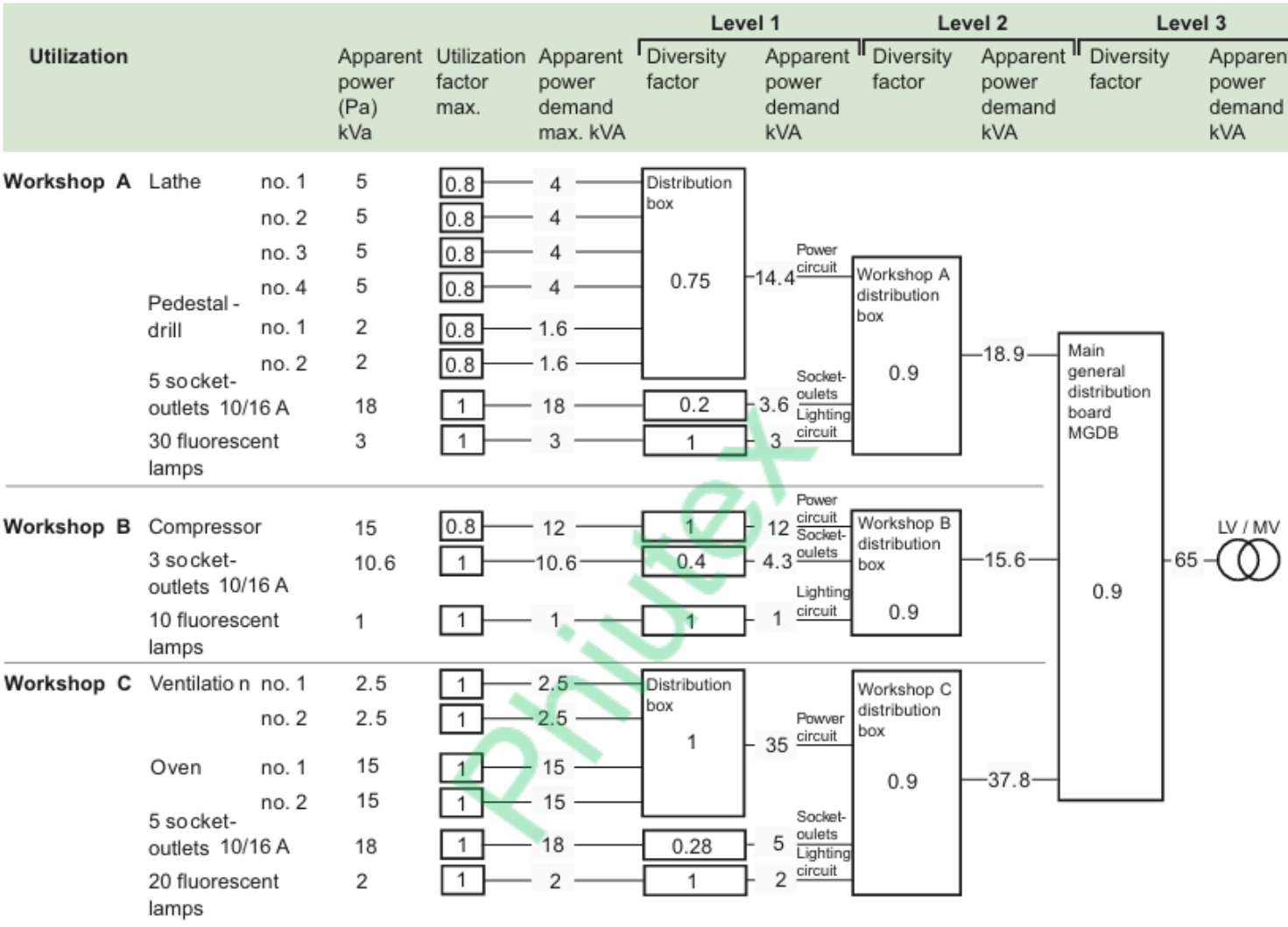

Fig.A15: An example in estimating the maximum predicted loading of an installation